Comar AIS-MULTI AIS Receiver • VHF Radio • GPS Chartplotter • Windows Computer • Rose Point Navigation Systems Coastal Explorer • GlobalSat BU-353 USB GPS

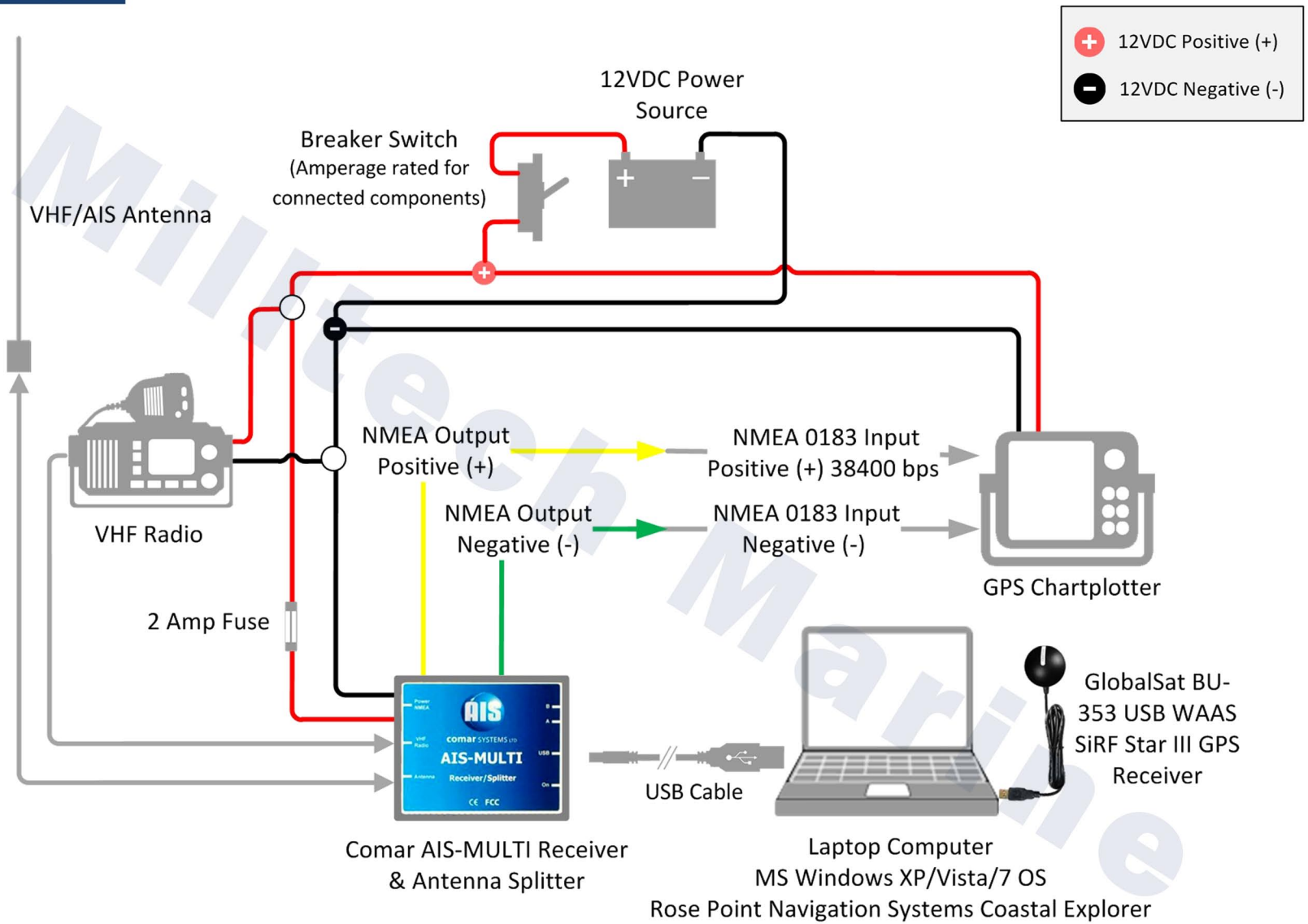

Note: This is one connection solution for these components. Depending on the circumstances of your specific installation, other solutions may be possible

Copyright © 2010 Milltech Marine, Inc. • All Rights Reserved • www.milltechmarine.com • 866-606-6143